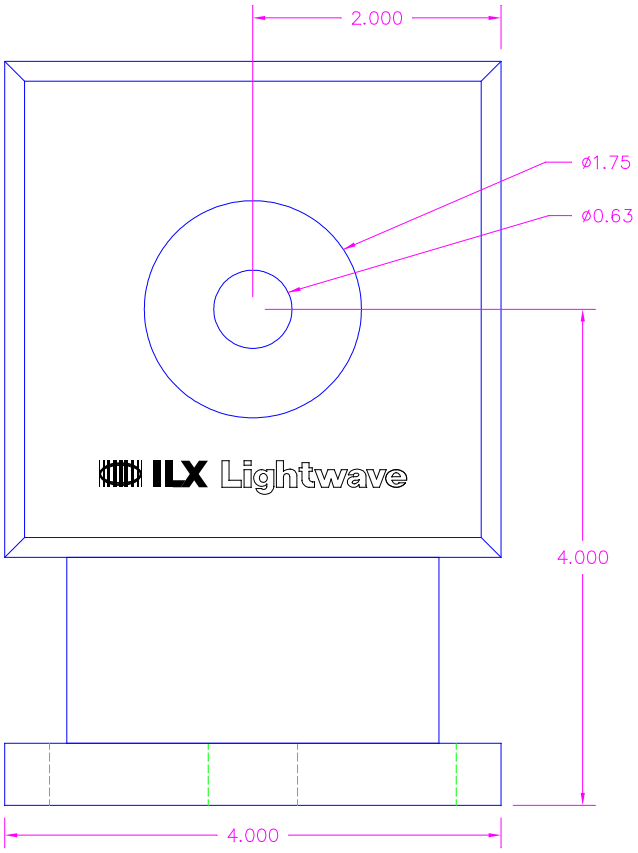

FRONT VIEW

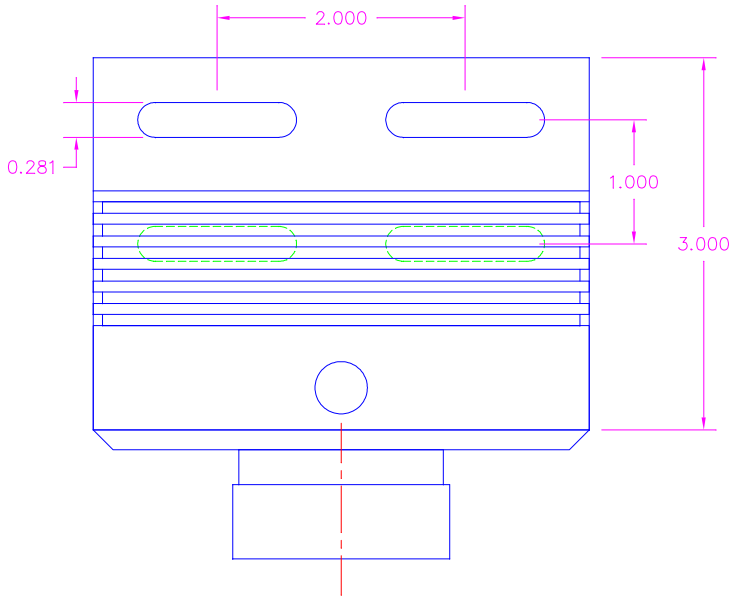

TOP VIEW

REV	DATE	DESCRIPTION	CHK
00	1/24/05	RELEASE	SAR

REVISIONS

UNLESS OTHERWISE SPECIFIED:
DIMENSIONS ARE IN INCHES

TOLERANCES:

FRACTIONAL	
DECIMAL .XX	± .01
DECIMAL .XXX	± .005
ANGULAR	± 1°
HOLE TOL.	± .005

DO NOT SCALE DRAWING

AUTOCAD # 600222

FINISH		BLACK ANODIZE
MATERIAL		ALUMINUM, 6061-T6
	ILX PART	DESCRIPTION

THIS DRAWING IS THE PROPERTY OF ILX LIGHTWAVE CORPORATION. IT IS FURNISHED TO YOU FOR CONFIDENTIAL INFORMATION PURPOSES ONLY AND IS NOT TO BE DISCLOSED TO ANYONE, REPRODUCED, OR USED FOR MANUFACTURING PURPOSES WITHOUT THE WRITTEN PERMISSION OF ILX LIGHTWAVE CORPORATION.

DRAWN BY J. Remington	DATE 1/24/05	ILX Lightwave	
CHECK BY	DATE	telephone: (406) 586-1244	31950 East Frontage Road Bozeman, Montana 59715
APPRV BY	DATE	SIZE B	TITLE LDM-4412 MOUNTING DIMENSIONS
APPRV BY	DATE	SCALE 1X	DWG. NO. LDM-4412 REV 00 SHEET 1/1